Revision Number	Date	Description of Changes	Implemented By
0.1	23/10/19	Import of ShieldBuddy TC275 rev C. Updated for TC365. Added CAN and TLF35584. Updated power schems for USB.	A Davison
0.2	18/11/19	Updated CAN pin allocation. Removed unused 0R option from early TC275 design.	A Davison
0.3	17/12/19	Updated following review	A Davison
A	08/01/20	Updated following review. Up-issued.	A Davison

Tool	Used?	Tool notes	Reviewed at Rev.
Partial N.ERC	Y	Used to stop swamping compilation reports.	0.3
Variant manager	Y	3V3 and 5V variants. TC275 variants not implemented.	0.3

Not For Public Distribution

Z_PCB

PCB

4269.04.06210_A

Checked By:	Title: ***ShieldBuddy TC375 Revision History***		*Hitex (UK) Ltd.* *Millburn Hill Road* *Coventry* *CV4 7HS*
Approved By:	Size: A3	Number: 4269.04.06200	Revision: A
	Date: 09/01/2020	(c) Hitex (UK) Ltd.	Sheet 1 of 6
	File: ShieldBuddy Revision History.SchDoc		Author: A.Davison

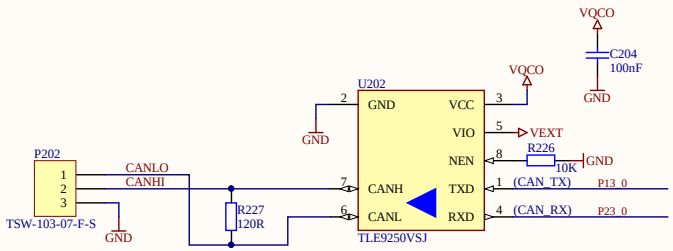

There is no mention of HWCFG0 in DS, but it exists in TriBoard TC3x7

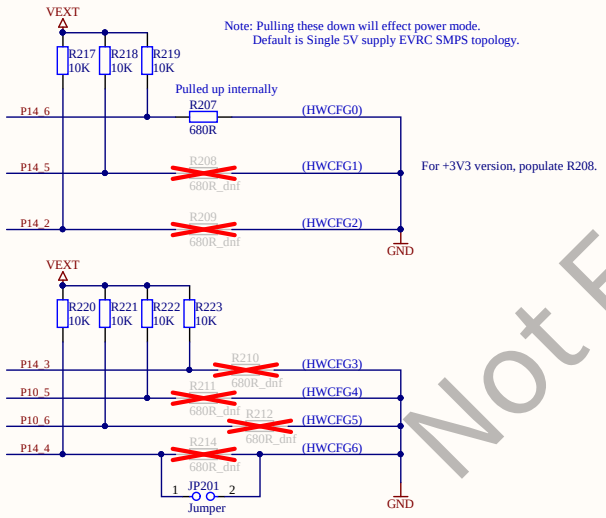

Note: Pulling these down will effect power mode.
Default is Single 5V supply EVRC SMPS topology.

For +3V3 version, populate R208.

Default is open

NOTE: Boot and PLL configuration (about configuration see the TC375T manual).

Default is Internal Start From Flash

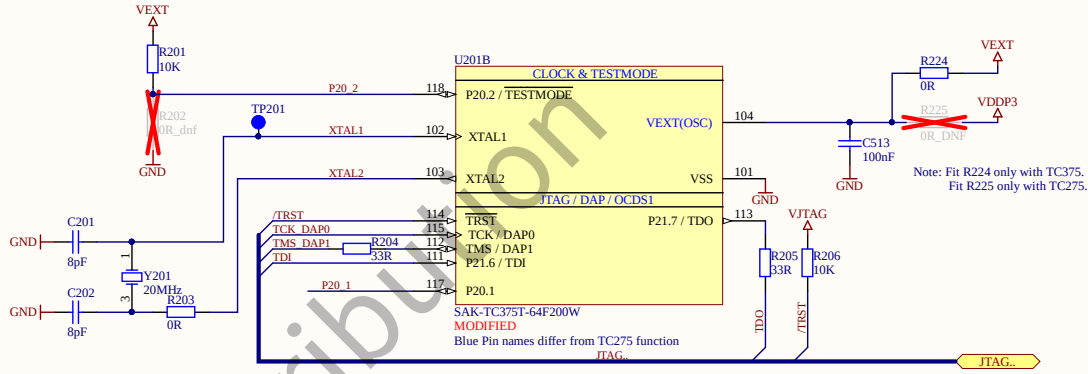

Note: Fit R224 only with TC375.
Fit R225 only with TC275.

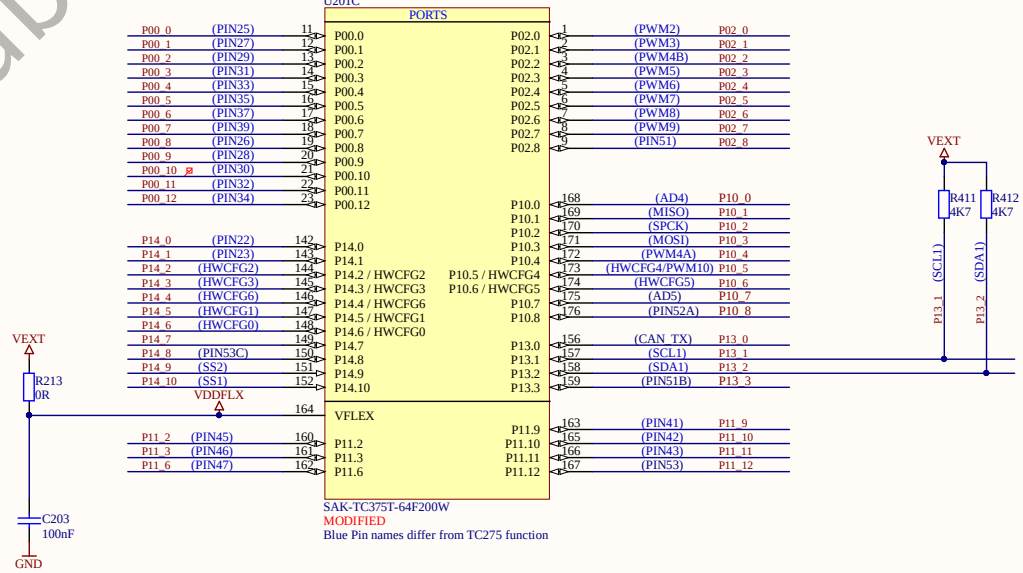

Not For Public Distribution

Checked By:	Title: *Aurix Clock and JTAG*		*Hitex (UK) Ltd.* *Millburn Hill Road* *Coventry* *CV4 7HS*
Approved By:	Size: A3	Number: 4269.04.06200	Revision: A
	Date: 09/01/2020	(c) Hitex (UK) Ltd.	Sheet 2 of 6
	File: Clock_JTAG.SchDoc		Author: A.Davison

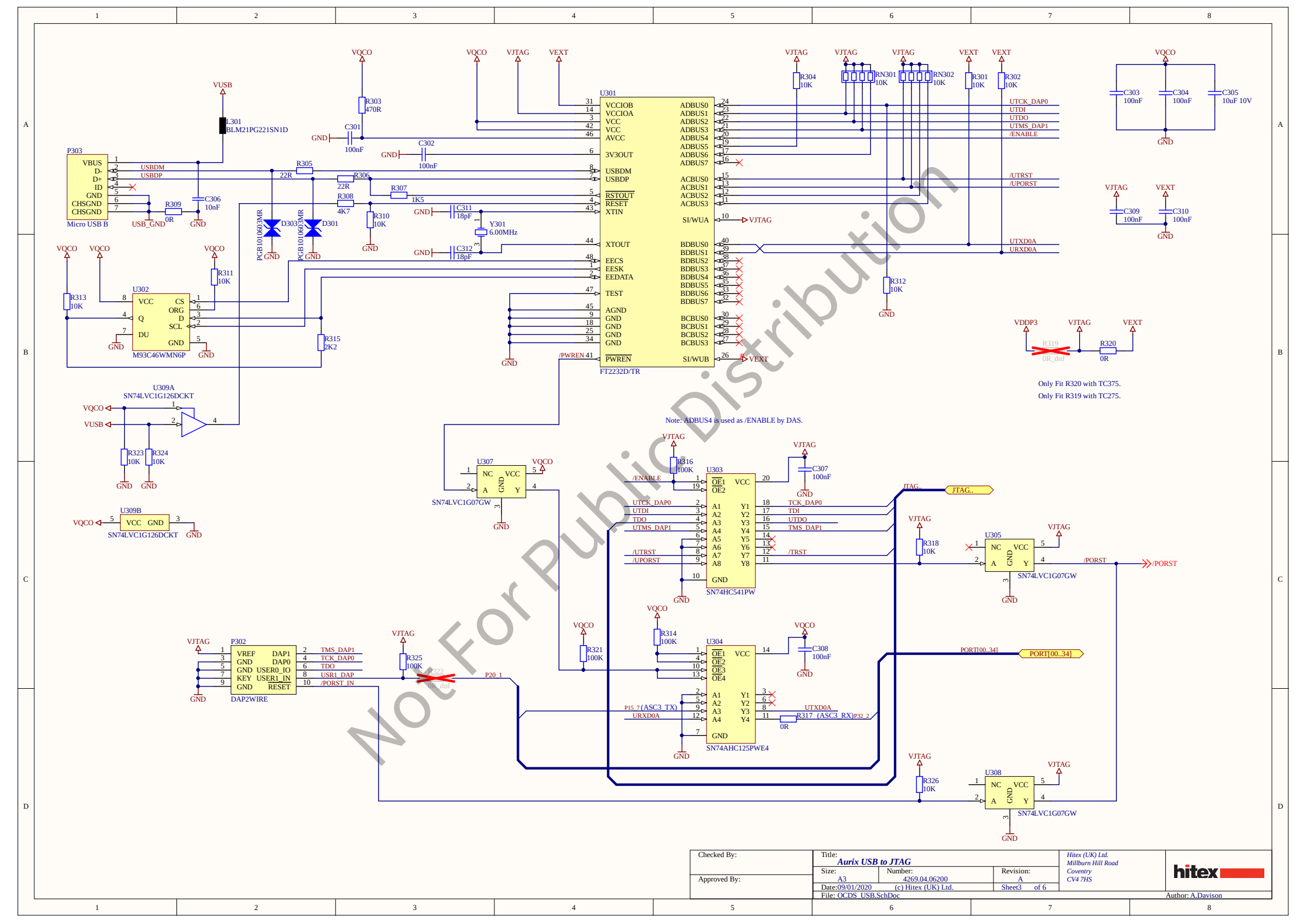

Not For Public Distribution

Checked By:	Title: *Aurix USB to JTAG*		*Hitex (UK) Ltd.* *Millburn Hill Road* *Coventry* *CV4 7HS*
Approved By:	Size: A3	Number: 4269.04.06200	Revision: A
	Date: 09/01/2020	(c) Hitex (UK) Ltd.	Sheet3 of 6
	File: OCDS_USB.SchDoc		Author: A.Davison

Note: Pin numbering on Arduino Due is mirrored. However PCB matches.

PWMH

J401

P13_1	(SCL1)	10
P13_2	(SDA1)	9
	(AREF)	8
VAREF0		7
GND		6
P10_2	(SPCK)	5
P10_1	(MISO)	4
P10_3	(MOSI)	3
P10_5	(SS0/PWM10)	2
P02_7	(PWM9)	1
P02_6	(PWM8)	

SSW-110-01-G-S

PWML

J402

P02_5	(PWM7)	8
P02_4	(PWM6)	7
P02_3	(PWM5)	6
P10_4	(SS1/PWM4)	5
P02_1	(PWM3)	4
P02_0	(PWM2)	3
P15_2	(TX)	2
P15_3	(RX)	1

SSW-108-01-G-S

P10_4 — R410 0R — P02_2

COMMUNICATION

J403

P15_4	(SCL0-3)	8
P15_5	(SDA0-3)	7
P20_3	(RXD2)	6
P20_0	(TXD2)	5
P23_2	(RXD1)	4
P23_3	(TXD1)	3
P15_1	(RXD0)	2
P15_0	(TXD0)	1

SSW-108-01-G-S

ADCL

J404

P20_6	& SAR2_4	(AD7)	8
P14_7	& SAR2_5	(AD6)	7
P10_7	& SAR3_0	(AD5)	6
P10_0	& SAR3_1	(AD4)	5
P33_9	& SAR8_4	(AD3)	4
P23_1	& SAR8_5	(AD2)	3
P32_4	& SAR8_6	(AD1)	2
P32_3	& SAR8_7	(AD0)	1

SSW-108-01-G-S

ADCH

J405

SAR8_15	& P20_8	(CANTX0)	8
SAR8_14	& P20_7	(CANRX0)	7
SAR8_13	& P14_8	(DAC1)	6
SAR8_12	& P20_9 & P33_10	(DAC0)	5
P23_4	& SAR0_0	(AD11)	4
P23_5	& SAR0_1	(AD10)	3
P22_2	& SAR0_2	(AD9)	2
P33_6	& SAR0_3	(AD8)	1

SSW-108-01-G-S

J406

VEXT VEXT

P14_1	(PIN23)	1 2	(PIN22) P14_0
P00_0	(PIN25)	3 4	(PIN24) P15_6
P00_1	(PIN27)	5 6	(PIN26) P00_8
P00_2	(PIN29)	7 8	(PIN28) P00_9
P00_3	(PIN31)	9 10	(PIN30) P00_10
P00_4	(PIN33)	11 12	(PIN32) P00_11
P00_5	(PIN35)	13 14	(PIN34) P00_12
P00_6	(PIN37)	15 16	(PIN36) P33_2
P00_7	(PIN39)	17 18	(PIN38) P33_1
P11_9	(PIN41)	19 20	(PIN40) P33_0
P11_11	(PIN43)	21 22	(PIN42) P11_10
P11_2	(PIN45)	23 24	(PIN44) P33_3
P11_6	(PIN47)	25 26	(PIN46) P11_3
P21_0	(PIN49)	27 28	(PIN48) P21_3
P33_12 & P13_3 & P02_8	(PIN51)	29 30	(PIN50) P33_4 & P21_2 & P33_13
P33_7 & P20_10 & P11_12	(PIN53)	31 32	(PIN52) P33_5 & P15_8 & P10_8
		33 34	P33_11
		35 36	

GND GND

SSW-118-01-G-D

Note: SW will need to ensure these shared pins are all inputs as default.
Do ot set more than 1 as output at any 1 time.

P201

VEXT

P22_1	(MISO3)	1 2	
P22_3	(SPCK3)	3 4	(MOSI3) P22_0
/PORST	(MASTER RESET)	5 6	

TSM-103-01-L-DV — GND

D401

P10_2 — D401 LED (YELLOW) — R408 4K7 — GND

VEXT VEXT

R215 4K7 R216 4K7

U201D

PORTS

P15_0	(TXD0)	133	P15.0	P22.0	95 (MOSI3) P22_0
P15_1	(RXD0)	134	P15.1	P22.1	96 (MISO3) P22_1
P15_2	(TX)	135	P15.2	P22.2	97 (AD9) P22_2
P15_3	(RX)	136	P15.3	P22.3	98 (SPCK3) P22_3
P15_4	(SCL0-3)	137	P15.4		
P15_5	(SDA0-3)	138	P15.5		
P15_6	(PIN24)	139	P15.6		
P15_7	(ASC3_TX)	140	P15.7	P23.0	89 (CAN_RX) P23_0
P15_8	(PIN52B)	141	P15.8	P23.1	90 (AD2) P23_1
				P23.2	91 (RXD1) P23_2
				P23.3	92 (TXD1) P23_3
P20_0	(TXD2)	116	P20.0	P23.4	93 (AD11) P23_4
P20_3	(RXD2)	119	P20.3	P23.5	94 (AD10) P23_5
P20_6	(AD7)	124	P20.6		
P20_7	(CANRX0)	125	P20.7		
P20_8	(CANTX0)	126	P20.8	P32.2	86 (ASC3_RX) P32_2
P20_9	(DAC0B)	127	P20.9	P32.3	87 (AD0) P32_3
P20_10	(PIN53B)	128	P20.10	P32.4	88 (AD1) P32_4
P20_11	(TLF_SCLK0)	129	P20.11		
P20_12	(TLF_MRST0)	130	P20.12		
P20_13	(TLF_SLSO2)	131	P20.13		
P20_14	(TLF_MTSR0)	132	P20.14		
				P33.0	70 (PIN40) P33_0
				P33.1	71 (PIN38) P33_1
				P33.2	72 (PIN36) P33_2
				P33.3	73 (PIN44) P33_3
				P33.4	74 (PIN50A) P33_4
				P33.5	75 (PIN52C) P33_5
P21_0	(PIN49)	105	P21.0	P33.6	76 (AD8) P33_6
		106	P21.1	P33.7	77 (PIN53C) P33_7
P21_2	(PIN50C)	107	P21.2	P33.8	78 (TLF_ERR) P33_8
P21_3	(PIN48)	108	P21.3	P33.9	79 (AD3) P33_9
		109	P21.4	P33.10	80 (DAC0A) P33_10
		110	P21.5	P33.11	81 (PIN52D) P33_11
				P33.12	82 (PIN51C) P33_12
				P33.13	83 (PIN50B) P33_13

P21 is 3V3 for TC275. VEXT for TC375.

SAK-TC375T-64F200W
MODIFIED
Blue Pin names differ from TC275 function

TP403

P21_2 — R409 0R_dnf — P15_4

P15_4 (SCL0-3) — R406 0R
P15_5 (SDA0-3) — R407 0R

U201E

VADC / DSADC

SAR0_0	(AD11)	67	AN0		
SAR0_1	(AD10)	66	AN1		
SAR0_2	(AD9)	65	AN2		
SAR0_3	(AD8)	64	AN3		
		63	AN4		
		62	AN5		
		61	AN6		
		60	AN7		
		59	AN8		
		58	AN10	VDDM	54
		57	AN11		
		56	AN12		
		55	AN13	VSSM	53
		50	AN16		
		49	AN17 / P40.10		
		48	AN18 / P40.11		
		47	AN19 / P40.12	VAREF1	52
		46	AN20		
SAR2_4	(AD7)	45	AN21		
SAR2_5	(AD6)	44	AN24 / P40.0	VAGND1	51
SAR3_0	(AD5)	43	AN25 / P40.1		
SAR3_1	(AD4)	42	AN26 / P40.2		
		41	AN27 / P40.3		
		40	AN28 / P40.13	VAREF2	26
		39	AN29 / P40.14		
		38	AN32 / P40.4		
		37	AN33 / P40.5	VAGND2	27
		36	AN35		
SAR8_4	(AD3)	35	AN36 / P40.6		
SAR8_5	(AD2)	34	AN37 / P40.7		
SAR8_6	(AD1)	33	AN38 / P40.8		
SAR8_7	(AD0)	32	AN39 / P40.9		
SAR8_12	(DAC0)	31	AN44		
SAR8_13	(DAC1)	30	AN45		
SAR8_14	(CANRX0)	29	AN46		
SAR8_15	(CANTX0)	28	AN47		

SAK-TC375T-64F200W
MODIFIED
Blue Pin names differ from TC275 function

VDDM — C401 47nF — AGND — L401 BLM18BA100SN1D — VQVR
VSSM — R401 0R — GND
VAREF0 — C402 100nF — AGND — L402 BLM18BA100SN1D — VQVR
VAREF2 — C403 100nF — AGND — L403 BLM18BA100SN1D — VQVR

TP401 — C404 47uF 10V — VEXT — AGND

R402 0R — AGND

Not For Public Distribution

Checked By:	Title: *Aurix Ports and ADC*	*Hitex (UK) Ltd. Millburn Hill Road Coventry CV4 7HS*
Approved By:	Size: A3 / Number: 4269.04.06200 / Revision: A	
	Date: 09/01/2020 (c) Hitex (UK) Ltd. Sheet 4 of 6	
	File: Ports_ADC.SchDoc	Author: A.Davison

5V version

Component	Populated	Value
R521	Yes	0R
R523	No	n/a

3V3 version

Component	Populated	Value
R521	No	n/a
R523	Yes	0R

VEXT is AURIX naming convention.
Pin 5 is VDD in Arduino standard pinning.

POWER

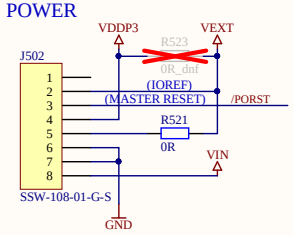

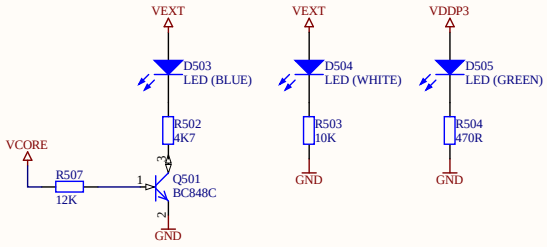

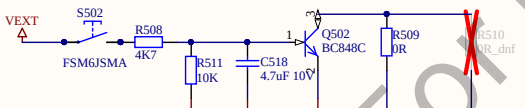

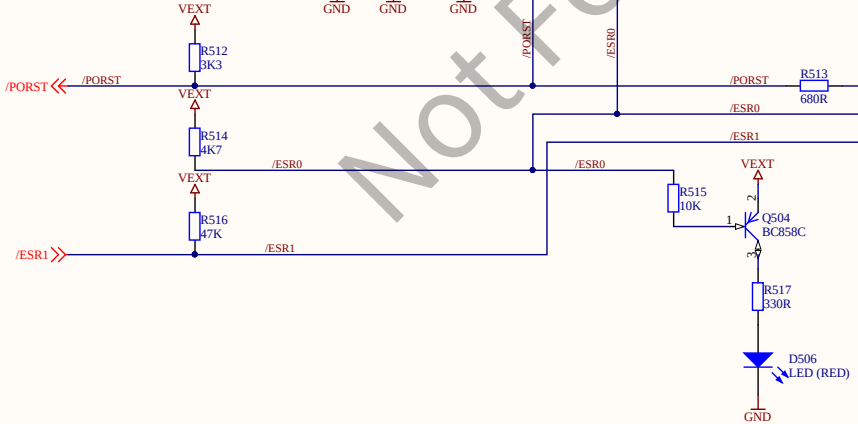

Fit R519 for TC375. DNF R505
Fit R505 for TC275. DNF R519

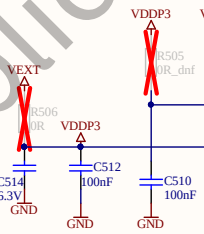

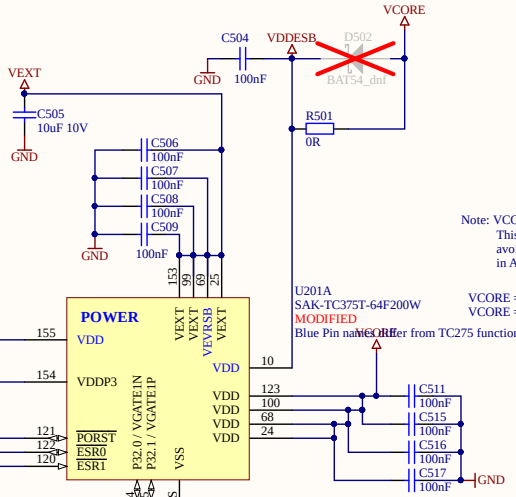

Note: VCORE is VDD of AURIX.
This has been named VCORE to avoid confusion with VDD in Arduino standard pinning.

VCORE = 1.25V for TC375.
VCORE = 1.3V for TC275.

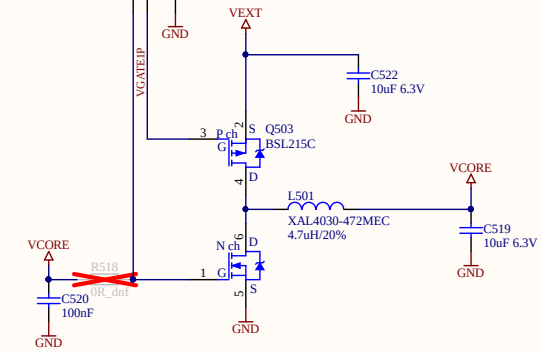

Not For Public Distribution

Checked By:	Title: *Aurix Supply*		Hitex (UK) Ltd. Millburn Hill Road Coventry CV4 7HS
Approved By:	Size: A3	Number: 4269.04.06200	Revision: A
	Date: 09/01/2020	(c) Hitex (UK) Ltd.	Sheet5 of 6
	File: Supply.SchDoc		Author: A.Davison

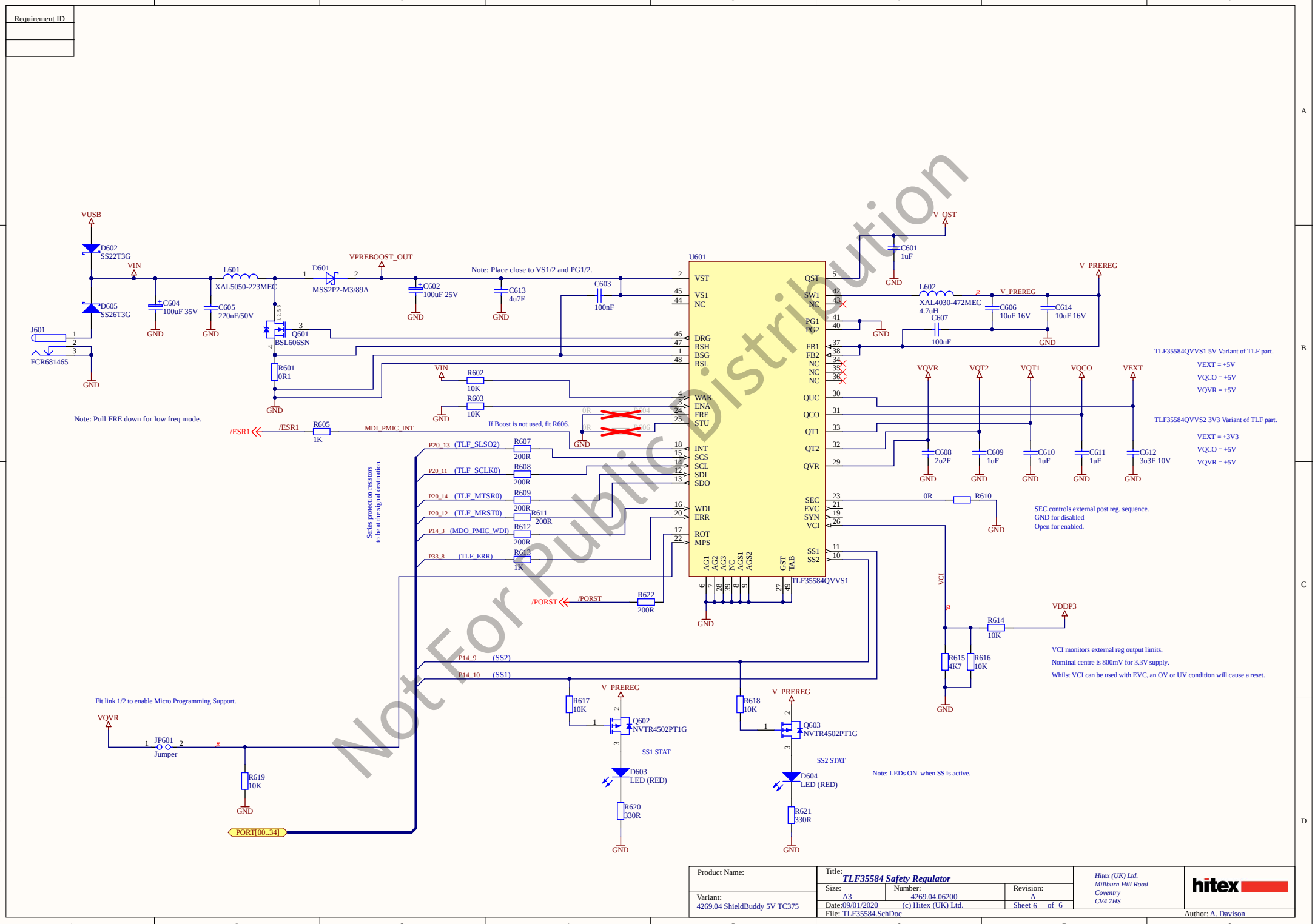
Requirement ID
VUSB
D602
SS22T3G
VIN
D605
SS26T3G
J601
FCR681465
GND
C604
100uF 35V
C605
220nF/50V
L601
XAL5050-223MEC
D601
MSS2P2-M3/89A
VPREBOOST_OUT
C602
100uF 25V
C613
4u7F
C603
100nF
Note: Place close to VS1/2 and PG1/2.
Q601
BSL606SN
R601
0R1
Note: Pull FRE down for low freq mode.
/ESR1
R605
1K
MDI_PMIC_INT
R602
10K
R603
10K
If Boost is not used, fit R606.
U601
VST
VS1
NC
DRG
RSH
BSG
RSL
WAK
ENA
FRE
STU
INT
SCS
SCL
SDI
SDO
WDI
ERR
ROT
MPS
AG1
AG2
AG3
NC
AGS1
AGS2
GST
TAB
QST
SW1
NC
PG1
PG2
FB1
FB2
NC
NC
NC
QUC
QCO
QT1
QT2
QVR
SEC
EVC
SYN
VCI
SS1
SS2
TLF35584QVVS1
V_QST
C601
1uF
V_PREREG
L602
XAL4030-472MEC
4.7uH
C606
10uF 16V
C614
10uF 16V
C607
100nF
TLF35584QVVS1 5V Variant of TLF part.
VEXT = +5V
VQCO = +5V
VQVR = +5V
TLF35584QVVS2 3V3 Variant of TLF part.
VEXT = +3V3
VQCO = +5V
VQVR = +5V
VQVR
VQT2
VQT1
VQCO
VEXT
C608
2u2F
C609
1uF
C610
1uF
C611
1uF
C612
3u3F 10V
0R
R610
SEC controls external post reg. sequence.
GND for disabled
Open for enabled.
VCI
VDDP3
R614
10K
R615
4K7
R616
10K
VCI monitors external reg output limits.
Nominal centre is 800mV for 3.3V supply.
Whilst VCI can be used with EVC, an OV or UV condition will cause a reset.
Series protection resistors
to be at the signal destination.
P20_13 (TLF_SLSO2)
R607
200R
P20_11 (TLF_SCLK0)
R608
200R
P20_14 (TLF_MTSR0)
R609
200R
P20_12 (TLF_MRST0)
R611
200R
P14_3 (MDO_PMIC_WDI)
R612
200R
P33_8 (TLF_ERR)
R613
1K
/PORST
R622
200R
P14_9 (SS2)
P14_10 (SS1)
Fit link 1/2 to enable Micro Programming Support.
VQVR
JP601
Jumper
R619
10K
PORT[00..34]
R617
10K
Q602
NVTR4502PT1G
SS1 STAT
D603
LED (RED)
R620
330R
R618
10K
Q603
NVTR4502PT1G
SS2 STAT
D604
LED (RED)
R621
330R
Note: LEDs ON when SS is active.
Not For Public Distribution
Product Name:
Variant:
4269.04 ShieldBuddy 5V TC375
Title:
TLF35584 Safety Regulator
Size:
A3
Number:
4269.04.06200
Revision:
A
Date:09/01/2020
(c) Hitex (UK) Ltd.
Sheet 6 of 6
File: TLF35584.SchDoc
Hitex (UK) Ltd.
Millburn Hill Road
Coventry
CV4 7HS
hitex
Author: A. Davison